G-17 / GR-17

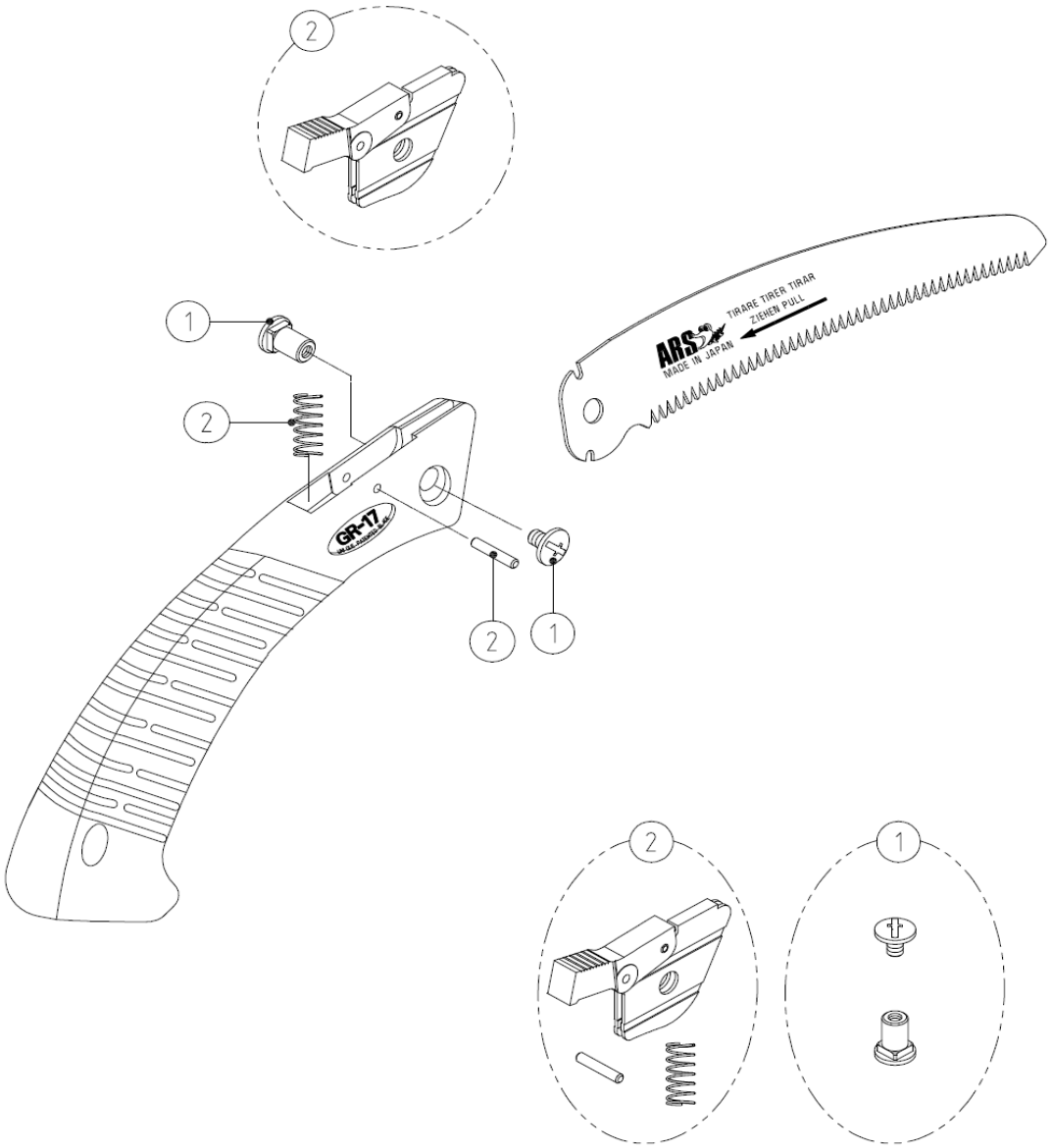

PARTS NO.	SPECIFICATION	PARTS NO.	SPECIFICATION
① SP-118	BOLT & NUT FOR Z-17/G-17/GR-17		
② SP-182	STOPPER SET FOR Z-17/G-17/GR-17		