EP-721

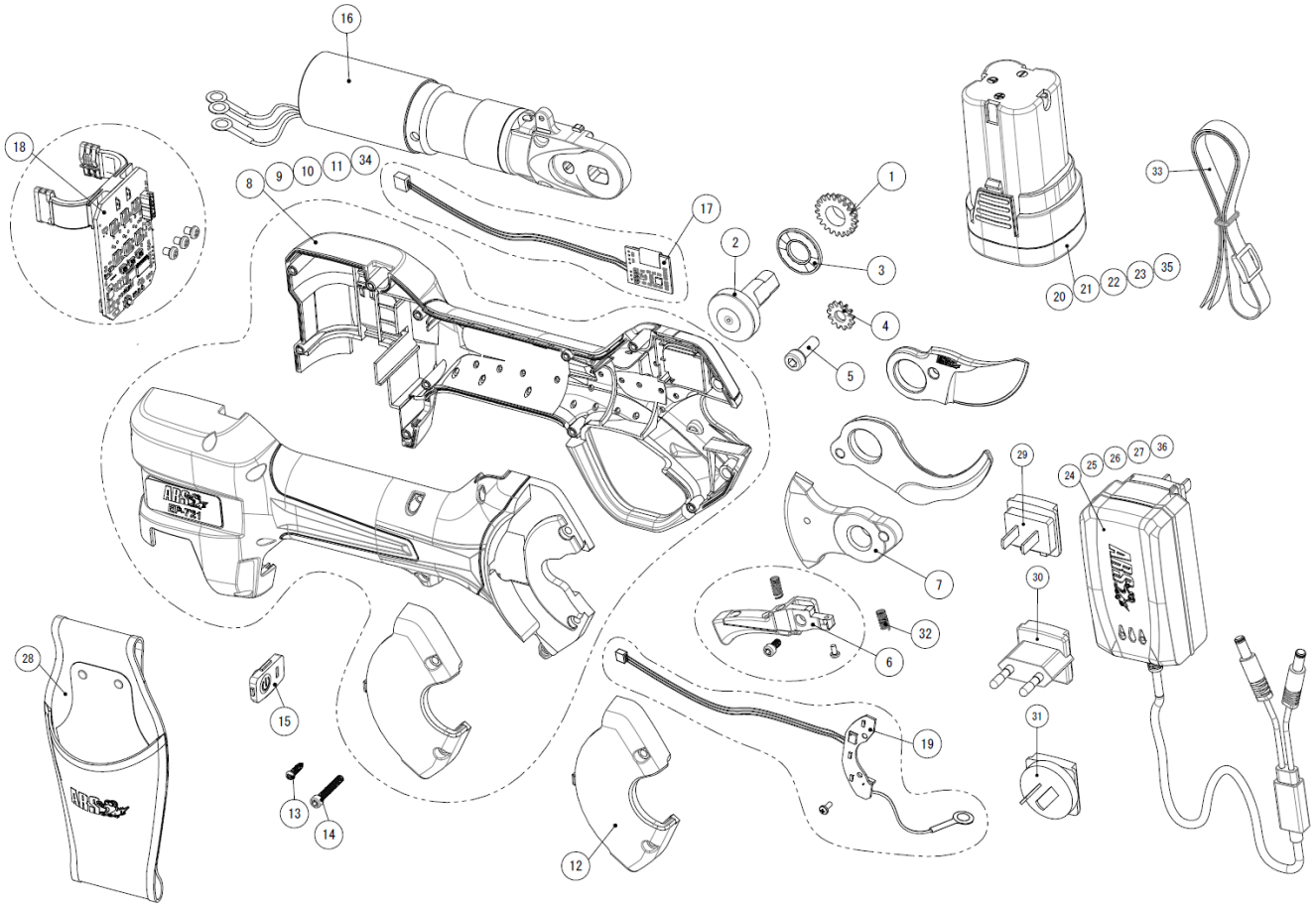

PARTS NO.	SPECIFICATION	PARTS NO.	SPECIFICATION
① SP-EP-079	CENTER NUT FOR THE BLADES	㉒ SP-EP-068	LITHIUM ION BATTERY W/ SPANISH
② SP-EP-080	CENTER BOLT FOR THE BLADES		WARNING LABEL
③ SP-EP-081	BEARING	㉓ SP-EP-069	LITHIUM ION BATTERY W/ KOREAN
④ SP-EP-049	NUT RETAINER		WARNING LABEL
⑤ SP-EP-082	BOLT FOR NUT RETAINER	㉔ SP-EP-070	BATTERY CHARGER W/ ENGLISH
⑥ SP-EP-083	TRIGGER SET W/ 2BOLTS & SPRING		WARNING LABEL, CHARGING PLUG TYPE-C,O
⑦ SP-EP-084	GEAR PLATE FOR UPPER BLADE	㉕ SP-EP-071	BATTERY CHARGER W/ PORTUGUESE
⑧ SP-EP-085	PRUNER BODY W/ ENGLISH WARNING LABEL		WARNING LABEL, CHARGING PLUG TYPE-C
⑨ SP-EP-086	PRUNER BODY W/ PORTUGUESE WARNING	㉖ SP-EP-072	BATTERY CHARGER W/ SPANISH
	LABEL		WARNING LABEL, CHARGING PLUG TYPE-A,C
⑩ SP-EP-087	PRUNER BODY W/ SPANISH WARNING LABEL	㉗ SP-EP-073	BATTERY CHARGER W/ KOREAN
⑪ SP-EP-088	PRUNER BODY W/ KOREAN WARNING LABEL		WARNING LABEL, CHARGING PLUG TYPE-C
⑫ SP-EP-089	FRONT COVER FOR PRUNER BODY	㉘ SP-EP-094	HOLSTER
⑬ SP-EP-058	"A" SCREW FOR PRUNER BODY (1PC)	㉙ SP-EP-075	CHARGING PLUG TYPE-A
⑭ SP-EP-060	BOLT FOR FRONT COVER FOR PRUNER BODY	㉚ SP-EP-076	CHARGING PLUG TYPE-C
	(1PC)	㉛ SP-EP-077	CHARGING PLUG TYPE-O
⑮ SP-EP-061	POWER SWITCH PLATE	㉜ SP-EP-078	SPRING ONLY FOR TRIGGER
⑯ SP-EP-090	INTERNAL MOTOR GEAR ASSEMBLY	㉝ SP-EP-095	HAND STRAP
⑰ SP-EP-091	LCD BOARD SET	㉞ SP-EP-096	PRUNER BODY W/ ENGLISH WARNING
⑱ SP-EP-092	CONTROL BOARD SET W/ 3 BOLTS		LABEL FOR TSE CERTIFICATE
⑲ SP-EP-093	SENSOR BOARD SET W/ 1 BOLT	㉟ SP-EP-097	LITHIUM ION BATTERY W/ ENGLISH
⑳ SP-EP-066	LITHIUM ION BATTERY W/ ENGLISH		WARNING LABEL FOR TSE CERTIFICATE
	WARNING LABEL	㊱ SP-EP-098	BATTERY CHARGER W/ ENGLISH
㉑ SP-EP-067	LITHIUM ION BATTERY W/ PORTUGUESE		WARNING LABEL, CHARGING PLUG TYPE-C,O
	WARNING LABEL		FOR TSE CERTIFICATE